스페이스-원
www.space-one.co.kr

# S205

## DESCRIPTION

. Zinc alloy die cast housing and cylinder.
. Satin chrome plated standard.
. 7 pin tumbler mechanism.
. Steel made tubular keys, nickle plated.
. Key may be withdrawn in one or both positions.
. Silver plated contacts and terminals.
. 3 position (on-on-on) 4 terminals.
A position 1-3 on, B position 1-4 on,
C position 1-4 on & 2-3 on
B to C position spring loaded for momentary contact
. Hex nut or speed clip mounted.
. 10000 combinations available.

Unit: mm

Recommended hole size

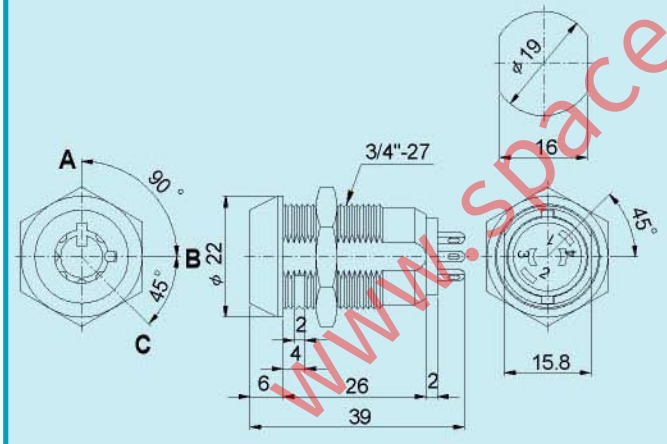


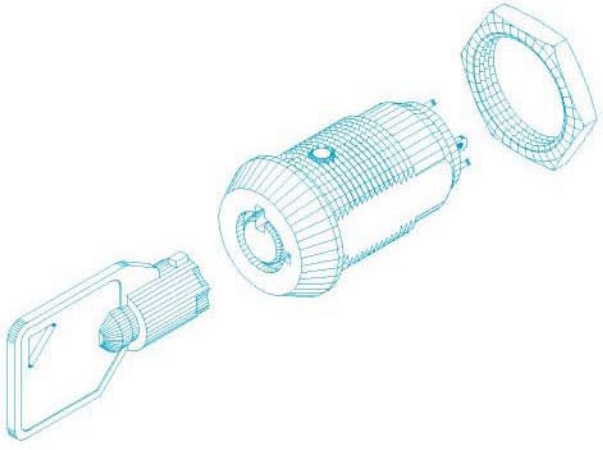

○ -OFF POSITION
▌ -INDICATES KEY-PULL
• -INDICATES NO KEY-PULL

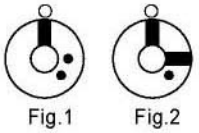
Fig.1 Fig.2

| Fig No | Lock Number | Pole | Positions | Terminals | Key Pulls | Turn | ↑ | → | ↘ |
|---|---|---|---|---|---|---|---|---|---|
| 1 | S205-1 | 1 | 3 | 4 | 1 | 90 135 | On | On | (On) |
| 2 | S205-2 | 1 | 3 | 4 | 2 | 90 135 | On | On | (On) |

( ):Momentary Contact

www.space-one.co.kr