스페이스-원
www.space-one.co.kr

S236-3C

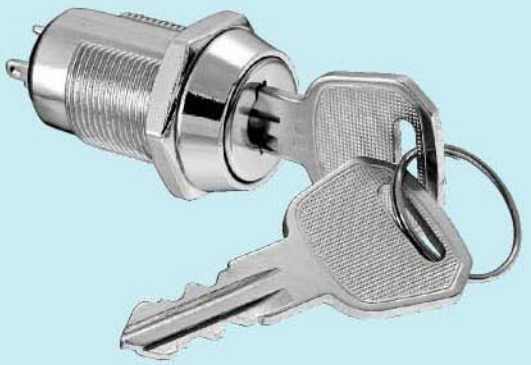

Unit: mm

Recommended hole size

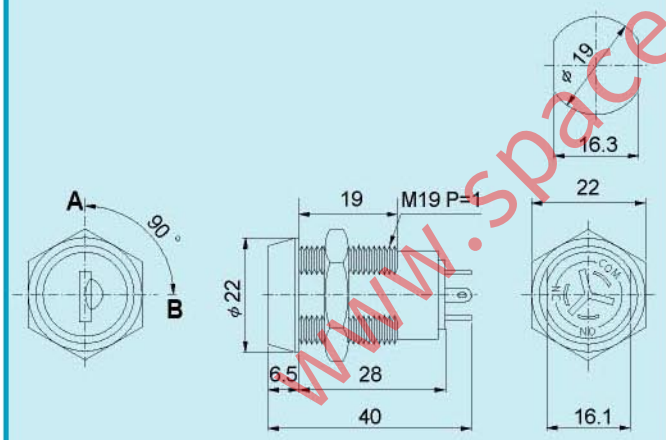

DESCRIPTION

. Zinc alloy die cast housing and nylon cylinder.
. Bright nickel plated standard.
. Dust shutter mechanism.
. 5 disc tumbler mechanism.
. Reversible double-bitted brass keys, nickel plated.
. Key may be withdrawn in one or two positions.
. Silver plated contacts and terminals.
. 2 position (on-on) 3 terminals.
. Hex nut mounted.
. All keyed alike or 25 combinations standard.
. 100 combinations available.

SPECIFICATION

. Contact Rating: 4A 125VAC, 2A 250VAC
. Contact Resistance: 10 Milli-Ohms Max.
. Insulation Resistance: 500 Meg-Ohms Min. (500VDC)
. Dielectric Strength: 1000 VAC - 1 Minute.

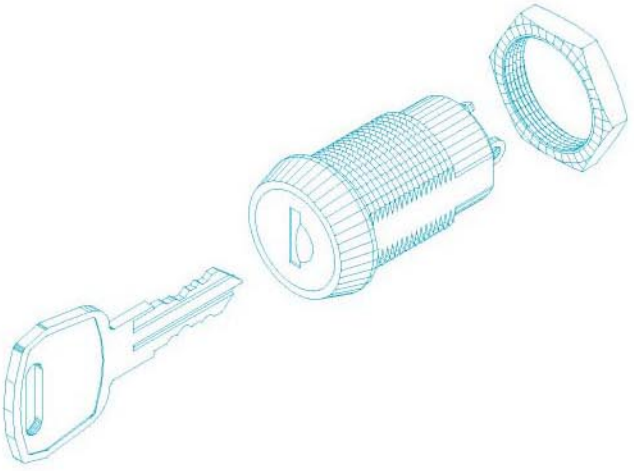

○ -OFF POSITION
▌ -INDICATES KEY-PULL
• -INDICATES NO KEY-PULL

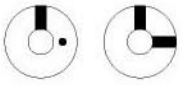

Fig.1 Fig.2

Fig No	Lock Number	Pole	Positions	Terminals	Key Pulls	Turn	↑	→	Type
1	S236-3C-1	1	2	3	1	90°	On	On	SPDT
2	S236-3C-2	1	2	3	2	90°	On	On	SPDT

www.space-one.co.kr